圆柱拉紧锁
compression cam latch

FORND 弗朗德工业

C1-1631 compression cam latch

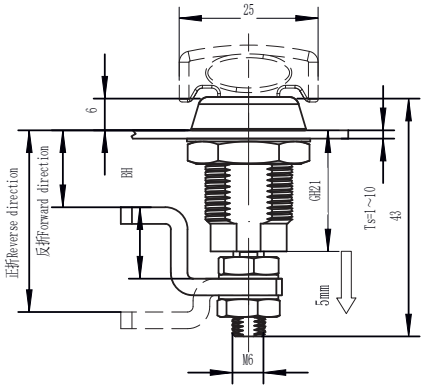

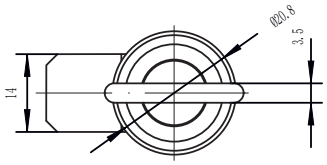

把手型
Knob style

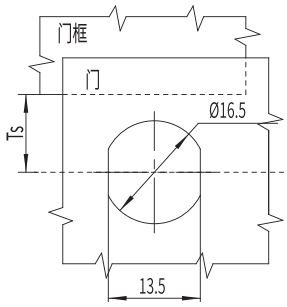

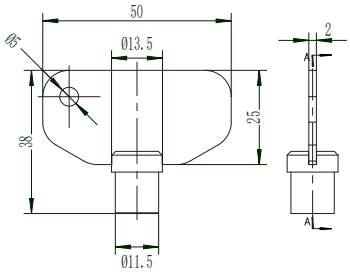

锁芯 Cylinder

612 613 614 615

选型 Model selection

锁芯选型
Lock cylinder selection

C1-1631-SX-LH-A1L

30 代表电镀亮铬
30 represents electroplating bright chrome
40 代表喷塑亚光黑
40 represents Black powder coated
A1 代表 SUS304
A1 represents SUS304

L 代表钢栓长度
L represents the length of the steel bolt
H 代表有效高度
H represents effective height

旋转 Rotate

顺时针锁紧
Clockwise locking

逆时针锁紧
Lock counterclockwise

1.Material and surface treatment:
Main body, Steel bolt: SUS304 or SUS316
Sealing ring: EPDM foam.

2. Performance parameters:
Protection class: IP65
Unlocking torque: ≤ 0.79N/M
Ultimate load: 200N
Tensioning and stretching amount: 4.5mm

3. Installation instructions:
Fixed screw torque 6N. M
Fixed nut torque 9N. M
Applicable door panel thickness: 1-3mm

1.材质及表面处理:
主体,钢栓: SUS304 或 SUS316
密封圈: EPDM发泡胶。

2.性能参数:
防护等级: IP65
解锁扭矩: 小于等于 0.79N/M
极限载荷: 200N
拉紧伸缩量: 4.5mm

3.安装说明:
固定螺丝扭矩 6N.M
固定螺母扭矩 9N.M
适用门板厚度: 1-3mm

如需获得产品3D模型图，请联系WWW.FORND.COM