## compression cam latch C3-1624

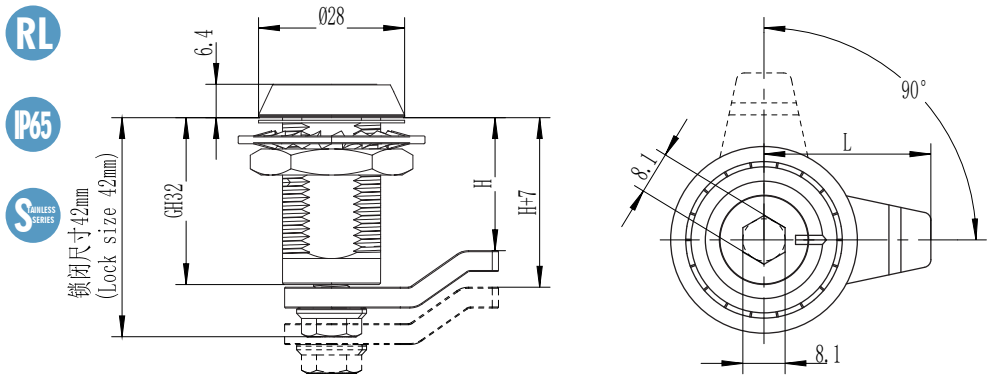


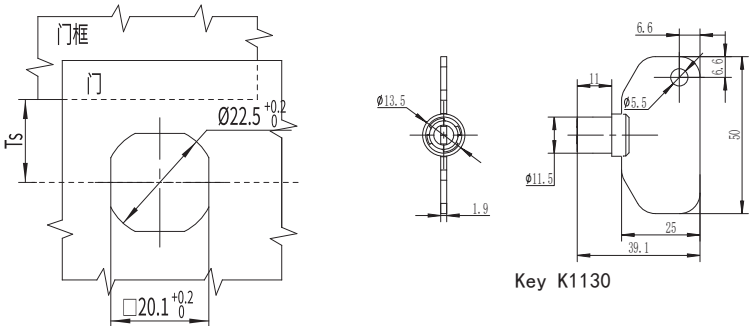


Key K1130

## 锁芯 Cylinder

637 150 168 124 547 548 537 538

## 选型 Model selection

锁芯选型
Lock cylinder selection

A1 代表 SUS304
A1 represents SUS304
A2 代表 SUS316
A2represents SUS316

**C3-1624-SX-LH-A1L**

L 代表钢栓长度
L represents the length of the steel bolt
H 代表有效高度
H represents effective height

## 旋转 Rotate

顺时针锁紧
Clockwise locking

逆时针锁紧
Lock counterclockwise

1.Material and surface treatment:
Main body, Steel bolt: SUS304 or SUS316
Sealing ring: EPDM foam.

2. Performance parameters:
Protection class: IP65
Unlocking torque: ≤ 0.79N/M
Ultimate load: 700N
Tensioning and stretching amount: 7mm

3. Installation instructions:
Fixed screw torque 10N. M
Fixed nut torque 17N. M
Applicable door panel thickness: 1-15mm

1.材质及表面处理:
主体,钢栓: SUS304 或 SUS316
密封圈: EPDM发泡胶。

2.性能参数:
防护等级: IP65
解锁扭矩: 小于等于 0.79N/M
极限载荷: 700N
拉紧伸缩量: 7mm

3.安装说明:
固定螺丝扭矩 10N.M
固定螺母扭矩 17N.M
适用门板厚度: 1-15mm

如需获得产品3D模型图，请联系WWW.FORND.COM