连杆型旋转把手
Rod Control Swinghandle

FORND 弗朗德工业

A-1201 Rod Control Swinghandle

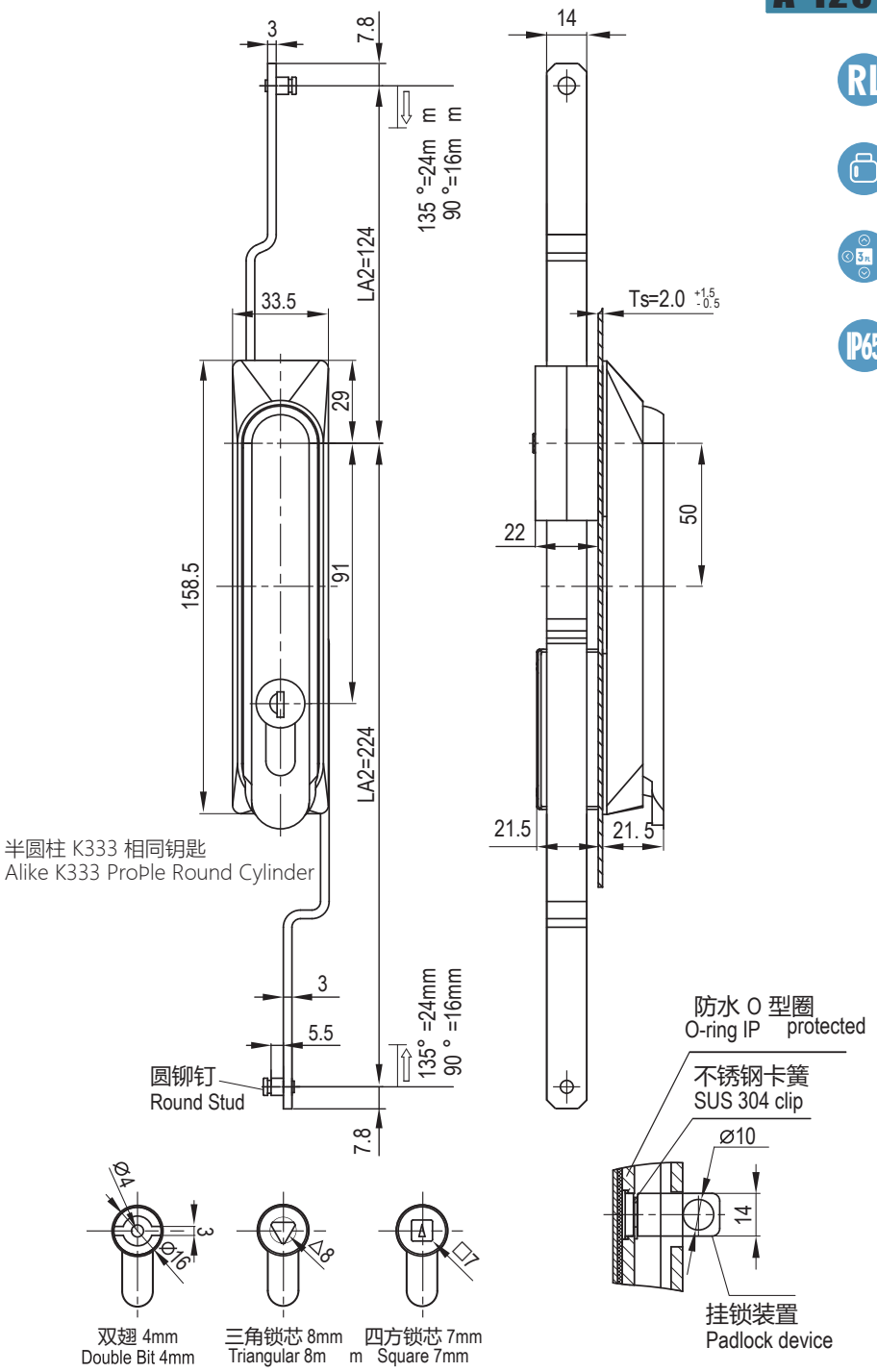

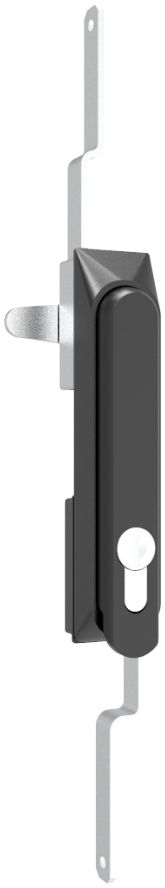

1.Material and surface treatment:
Lock body, handle, dust cover : Zamak
DIN-EN 1774-ZnAl4Cu1
Steel bolt: iron galvanized
Sealing ring: EPDM foam.

2. Performance parameters:
Protection class: IP65
Handle bearing tension value: ≤ 400N
Handle bearing torque value: ≤ 35N. m

4. Remarks:
Optional dedicated key
CH751 key optional
Can be equipped with stainless steel padlock
Default K333 key

1.材质及表面处理:
锁体，手柄，防尘盖: 5#锌合金喷塑黑
钢栓 : 铁镀锌
密封圈: EPDM发泡胶。

2.性能参数:
防护等级: IP65
手柄承载拉力值: ≤400N
手柄承载扭矩值: ≤35N.m

4.备注 :
专用钥匙可选
CH751 钥匙可选
可配不锈钢挂锁
默认 K333 钥匙

锁芯 Cylinder style	Version B(两点拉杆型 2Prod control)		Version C(三点拉杆型 3Prod control)	
	有防尘盖 With Dust Cap	无防尘盖 Without Dust Cap	有防尘盖 With Dust Cap	无防尘盖 Without Dust Cap
半圆柱 K333 相同钥匙 Alike K333 Prople Round Cylinder	A-1201-2P01-C-40	A-1201-2P01-NC-40	A-1201-3P01-C-40	A-1201-3P01-NC-40
双翅 4mm (Double Bit 4mm)	A-1201-2P02-C-40	A-1201-2P02-NC-40	A-1201-3P02-C-40	A-1201-3P02-NC-40
四方锁芯 7mm (Square 7mm)	A-1201-2P03-C-40	A-1201-2P03-NC-40	A-1201-3P03-C-40	A-1201-3P03-NC-40
三角锁芯 8mm (Triangular 8mm)	A-1201-2P04-C-40	A-1201-2P04-NC-40	A-1201-3P04-C-40	A-1201-3P04-NC-40

如需获得产品3D模型图，请联系WWW.FORND.COM